ICC-ES Evaluation Report

ESR-3446

Reissued October 2025

Revised December 2025

Subject to renewal October 2027.

This report also contains:

- **City of LA Supplement**
- **CA Supplement**
- **FL Supplement w/ HVHZ**

ICC-ES Evaluation Reports are not to be construed as representing aesthetics or any other attributes not specifically addressed, nor are they to be construed as an endorsement of the subject of the report or a recommendation for its use. There is no warranty by ICC Evaluation Service, LLC, express or implied, as to any finding or other matter in this report, or as to any product covered by the report.

Copyright © 2025 ICC Evaluation Service, LLC. All rights reserved.

DIVISION: 06 00 00—WOOD, PLASTICS AND COMPOSITES **Section: 06 05 23—Wood, Plastic and Composite Fastenings**	**REPORT HOLDER:** **MITEK® INC**	**EVALUATION SUBJECT:** **MITEK® SLOPEABLE/SKEWABLE HANGERS FOR WOOD-FRAMED CONSTRUCTION**	

1.0 EVALUATION SCOPE

Compliance with the following codes:

- 2024, 2021, 2018, 2015, and 2012 *International Building Code®* (IBC)
- 2024, 2021, 2018, 2015, and 2012 *International Residential Code®* (IRC)

Property evaluated:

Structural

2.0 USES

The MiTek Slopeable and Skewable Hangers used as structural connectors and described in this evaluation report are used to connect wood framing members in accordance with Section 2304.10.4 of the 2024 and 2021 IBC (Section 2304.10.3 of the 2018 and 2015 IBC, and Section 2304.9.3 of the 2012 IBC). The connectors may also be used in structures regulated under the IRC when an engineered design is submitted to, and approved by, the code official, in accordance with Section R301.1.3 of the IRC.

3.0 DESCRIPTION

3.1 LS Light Slope Hanger:

The LS Light Slope Hanger is used to connect joists to the face of the header members. The hanger has a seat that can be adjusted in the field to a maximum of 30 degrees downward from horizontal, to accommodate slopes up to seven units vertical in twelve units horizontal. The hanger is cold-formed from No. 18 gage steel, and is prepunched for installation with 16d common and 10d by $1^1/_2$-inch-long nails. See Table 1 and Figure 1 for product dimensions, fastener schedule, allowable loads, and a typical installation detail.

3.2 LSRR Light Slope Rafter and Retrofit Hanger:

The LSRR Light Slope Rafter and Retrofit Hanger is used to connect solid sawn rafters to the face of header members. The hanger has a seat that can be adjusted in the field to a maximum of 45 degrees up or down from horizontal. The carried member can be installed flush with the bottom of the supporting member or with the bottom of the carried member extended below the supporting member up to a distance of C_1 (see Table 2). The hanger may be installed as a retrofit after the rafters are in place. The hanger is cold-formed from No. 18 gage steel, and is prepunched for installation with 10d common and 10d by 1½-inch-long nails. See Table 2 and Figure 1 for product dimensions, fastener schedule, allowable loads, and typical installation details.

3.3 LSSH Light Slopeable/Skewable Hanger:

The LSSH Light Slopeable/Skewable Hanger is designed to connect rafters to ridge beams in vaulted roof structures. The hanger can be adjusted in the field to meet a variety of skew and/or slope applications. The hanger can be adjusted for any slope angle up to 45 degrees upward or downward from horizontal, and for any skew angle up to 45 degrees left or right from perpendicular. The hanger is cold-formed from either No. 16 gage or No. 18 gage steel, and is prepunched for installation with 16d common, 10d common or 10d by 1½-inch-long nails. See Table 3 and Figure 2 for product dimensions, fastener schedule, allowable loads, and typical installation details.

3.4 LSS Light Slopeable/Skewable Hanger:

The LSS Light Slopeable/Skewable Hanger is designed to connect bevel-cut joists to the face of header members. The hanger can be adjusted in the field to meet a variety of skew and/or slope applications. The hanger can be adjusted for any slope angle up to 45 degrees upward or downward from horizontal, and for any skew angle up to 45 degrees left or right from perpendicular. The hanger is cold-formed from No. 18 gage steel, and is prepunched for installation with 10d common or 10d by $1^1/_2$-inch-long nails. See Table 4 and Figure 3 for product dimensions, fastener schedule, allowable loads, and typical installation details.

3.5 MSHL/R Strap Hanger:

The MSHL/R strap hanger is designed to allow a field-adjustable top flange, face mount or combination for supporting dimensional wood joists or open web wood trusses. The MSHL/R strap hanger is cold-formed from No. 18 gage steel, and is prepunched for installation with 10d common nails installed into the header and 10d by $1^1/_2$-inch-long nails installed into the wood joists or open web wood trusses. See Table 5 and Figure 4 for product dimensions, mounting conditions, fastener schedule, allowable loads, and typical installation details.

3.6 SKH Skewed 45° Hanger:

The SKH skewed 45° hanger is designed as a face mount hanger that supports wood joists skewed either right or left at an angle of 45 degrees from perpendicular. The hanger is cold-formed from either No. 14 gage or No. 16 gage steel, and is prepunched for installation with 16d common, 10d common, or 10d by $1^1/_2$-inch-long nails. See Table 6 and Figure 5 for product dimensions, fastener schedule, allowable loads, and typical installation details.

3.7 SNP Skewed Nail Plate:

The SNP skewed nail plate is used to connect two framing members at angles ranging from 5 to 90 degrees to one another. The nail plate is manufactured from No. 16 gage steel, and is prepunched for installation with 8d by $1^1/_2$-inch-long nails. See Table 7 and Figure 6 for product dimensions, fastener schedule, allowable loads, and typical installation details.

3.8 TMP Rafter-to-Plate Connector:

The TMP rafter-to-plate connector is designed to make rafter-to-plate connections in lieu of notching. The connector has a seat that can be field-adjusted to slopes ranging from 1:12 to 6:12 (4.76 to 26.6 degrees). The connector is cold-formed from No. 18 gage steel, and is prepunched for installation with 10d common nails into the plate and 10d by $1^1/_2$-inch-long nails into the rafter. See Table 8 and Figure 7 for product dimensions, fastener schedule, allowable loads, and a typical installation detail.

3.9 TMPH Rafter-to-Plate Connector:

The TMPH rafter-to-plate connector is designed to provide a connection between a rafter and a top plate. The TMPH rafter-to-plate connector consists of a rafter seat and an adjustable fulcrum that adjusts to roof slopes ranging from 6:12 to 14:12 (26.6 to 49.4 degrees). The body of the connector is cold-formed from No. 16 gage steel, and is prepunched for installation with 10d common nails into the top plate and 10d-by-$1^1/_2$-inch nails into the rafter. The fulcrum component is cold-formed from No. 12 gage steel. See Table 9 and Figure 8 for product dimensions, fastener schedules, allowable loads, and a typical installation detail.

3.10 Materials:

3.10.1 Steel: The specific types of steel and corrosion protection for each product are described in Table 10 of this report. Minimum base-steel thicknesses for the different steel gages are shown in the following table:

GAGE NO.	MINIMUM BASE-STEEL THICKNESS (inch)
18	0.044
16	0.055
14	0.070
12	0.099

For **SI:** 1 inch = 25.4 mm.

3.10.2 Wood: Wood members must be dimensional sawn lumber, structural glued laminated timber, and metal-plate-connected wood trusses having a minimum specific gravity of 0.50, or approved engineered wood products, such as structural composite lumber (SCL) having a minimum equivalent specific gravity of 0.50, or prefabricated wood I-joists with either sawn lumber or SCL flanges, unless otherwise noted in the applicable table within this report. Wood members must have a moisture content not exceeding 19 percent (16 percent for engineered wood products), except as noted in Section 4.1. For connectors installed with nails, the thickness of the wood member must be sufficient such that the specified fasteners do not protrude through the opposite side of the member, unless otherwise permitted in the applicable table within this report. Wood members that are engineered wood products must be recognized in, and used in accordance with, a current ICC-ES evaluation report. Refer to Section 3.10.4 for issues related to the treated wood.

3.10.3 Nails: Required fastener types and sizes for use with the connectors described in this report are specified in this section and Tables 1 through 9. Nails used for connectors described in this report must be bright or hot-dipped galvanized carbon steel nails complying with material requirements, physical properties, tolerances, workmanship, protective coating and finishes, and packaging requirements specified in ASTM F1667; and must have lengths, diameters and bending yield strengths, F_{yb}, as shown in the following table:

FASTENER DESIGNATION	FASTENER LENGTH (inches)	SHANK DIAMETER (inch)	MINIMUM REQUIRED F_{yb} (psi)
8d x $1^1/_2$	1.5	0.131	100,000
10d x $1^1/_2$	1.5	0.148	90,000
10d common	3.0	0.148	90,000
16d common	3.5	0.162	90,000

For **SI:** 1 inch = 25.4 mm, 1 psi = 6,895 Pa.

Alternatively, nails of other materials or finishes may be used when they are recognized in an ICC-ES evaluation report as having bending yield strength and withdrawal capacity equal to or better than those of a bright carbon steel of the same nominal diameter.

3.10.4 Use in Treated Wood: Connectors and fasteners used in contact with preservative-treated or fire-retardant-treated wood must comply with Section 2304.10.6 of the 2024 and 2021 IBC (Section 2304.10.5 of the 2018 and 2015 IBC, and Section 2304.9.5 of the 2012 IBC) or Section R304.3 of the 2024 IRC or Section R317.3 of the 2021, 2018, 2015, and 2012 IRC. The lumber treater or the report holder (MiTek), or both, should be contacted for recommendations on the appropriate level of corrosion resistance to specify for the connectors and fasteners as well as the connection capacities of the fasteners used with the specific proprietary preservative-treated or fire-retardant-treated lumber.

4.0 DESIGN AND INSTALLATION

4.1 Design:

The allowable loads in Tables 1 through 9 are based on allowable stress design. The use of the tabulated allowable loads for the products listed in this report must comply with all applicable requirements and conditions specified in this evaluation report. The tabulated allowable loads are for normal load duration and/or short load duration, or both, based on load duration factors, C_D, in accordance with Section 11.3.2 of the *National Design Specification® for Wood Construction* (NDS) for the 2024, 2021, 2018 and 2015 IBC and IRC (Section 10.3.2 of the NDS for the 2012 IBC and IRC). No further increases are permitted for load durations other than those specified. The tabulated allowable loads are for connections in wood used under continuously dry conditions where the maximum moisture content in wood is 19 percent or less (16 percent or less for engineered wood products) and sustained temperatures are limited to 100°F (37.8°C) or less. When connectors are installed in wood having a moisture content greater than 19 percent (16 percent for engineered wood products), or where the in-service moisture content in wood is expected to exceed this value, the applicable wet service factor, C_M, must be applied. Unless otherwise noted in the tables of this report, the applicable wet service factor, C_M, is as specified in Section 11.3.3 of the NDS for the 2024, 2021, 2018 and 2015 IBC and IRC (Section 10.3.3 of the NDS for the 2012 IBC and IRC) for lateral loading of dowel-type fasteners. When connectors are installed in wood that will experience sustained exposure to temperatures exceeding 100°F (37.8°C), the allowable loads in this evaluation report must be adjusted by the temperature factor, C_t, specified in Section 11.3.4 of the NDS for the 2024, 2021, 2018 and 2015 IBC and IRC (Section 10.3.4 of the NDS for the 2012 IBC and IRC). Connected wood members must be checked for load-carrying capacity at the connection in accordance with NDS Section 11.1.2 for the 2024, 2021, 2018 and 2015 IBC and IRC (Section 10.1.2 of the NDS for the 2012 IBC and IRC).

4.2 Installation:

Installation of the connectors must be in accordance with this evaluation report and the manufacturer's published installation instructions. Mechanical fasteners must be installed in wood members in accordance with NDS Section 12.1.

4.3 Special Inspection:

4.3.1 Main Windforce-resisting Systems under the IBC: Periodic special inspection must be conducted for components within the main windforce-resisting system, where required in accordance with Sections 1704.2 and 1705.12 of the 2024 and 2021 IBC (Sections 1704.2 and 1705.11 of the 2018 and 2015 IBC, and Sections 1704.2 and 1705.10 of the 2012 IBC) as applicable.

4.3.2 Seismic-force-resisting Systems under the IBC: Periodic special inspection must be conducted for components within the seismic-force-resisting system, where required in accordance with Sections 1704.2 and 1705.13 of the 2024 and 2021 IBC (Sections 1704.2 and 1705.12 of the 2018 and 2015 IBC, and Sections 1404.2 and 1705.11 of the 2012 IBC) as applicable.

4.3.3 Installations under the IRC: Special inspections are normally not required for connectors used in structures regulated under the IRC. However, for components and systems requiring an engineered design in accordance with IRC Section R301, periodic special inspection requirements and exemptions must be in accordance with Sections 4.3.1 and 4.3.2 of this report.

5.0 CONDITIONS OF USE:

The MiTek connectors described in this report comply with, or are suitable alternatives to what is specified in, those codes listed in Section 1.0 of this report, subject to the following conditions:

5.1 The connectors must be manufactured, identified and installed in accordance with this report and the manufacturer's published installation instructions. A copy of the manufacturer's published installation instructions must be available at the jobsite at all times during installation. In the event of a conflict between this report and the manufacturer's published installation instructions, this report governs.

5.2 Calculations showing compliance with this report must be submitted to the code official. The calculations must be prepared by a registered design professional where required by the statutes of the jurisdiction in which the project is to be constructed.

5.3 Connected wood members and fasteners must comply with Sections 3.10.2 and 3.10.3, respectively.

5.4 Adjustment factors, noted in Section 4.1 of this report and the applicable codes, must be considered in the design of the connections where applicable.

5.5 Use of connectors and fasteners with preservative-treated or fire-retardant-treated lumber must be in accordance with Section 3.10.4.

6.0 EVIDENCE SUBMITTED

Data in accordance with the ICC-ES Acceptance Criteria for Joist Hangers and Similar Devices (AC13), approved October 2018 (editorially revised February 2024).

7.0 IDENTIFICATION

7.1 Each connector described in this report is identified by the product model (stock) number, the number of the ICC-ES index evaluation report for MiTek Inc. (ESR-2685), and by one or more of the following designations: MiTek, USP, or USP Structural Connectors.

7.2 The report holder's contact information is the following:

MITEK® INC.
16023 SWINGLEY RIDGE ROAD
CHESTERFIELD, MISSOURI 63017
(800) 328-5934
www.mitek-us.com
uspcustomerservice@mii.com

TABLE 1—LS LIGHT SLOPE HANGER ALLOWABLE LOADS [1, 2, 3, 4]

STOCK NO.	STEEL GAGE	DIMENSIONS			FASTENER SCHEDULE				ALLOWABLE LOAD (lbf)			
		W	H	D	Header		Joist		Download			Uplift
		(in.)			Qty.	Type	Qty.	Type	C_D = 1.0	C_D = 1.15	C_D = 1.25	C_D = 1.6
LS268	18	$1^9/_{16}$	$5^1/_2$	3	7	10d x $1^1/_2$	7	10d x $1^1/_2$	840	960	1,035	675
					7	16d Common	7	10d x $1^1/_2$	1,000	1,135	1,170	675
LS210	18	$1^9/_{16}$	$7^7/_8$	3	9	10d x $1^1/_2$	9	10d x $1^1/_2$	1,080	1,230	1,330	1,035
					9	16d common	9	10d x $1^1/_2$	1,285	1,350	1,350	1,035

For **SI:** 1 inch = 25.4 mm, 1 lbf = 4.45 N.

[1]Allowable loads have been adjusted for load duration factors, C_D, as shown, in accordance with the NDS. The allowable loads do not apply to loads of other durations, and are not permitted to be adjusted for other load durations. See Sections 4.1 and 4.2 for additional design and installation requirements.
[2]Allowable loads shown are for installations in wood members complying with Section 3.10.2.
[3]See Section 3.10.3 for required fastener dimensions and mechanical properties.
[4]Hangers may be field adjusted to a maximum of 30 degrees from horizontal, to accommodate slopes up to 7:12.

TABLE 2 - LSRR LIGHT SLOPE RAFTER AND RETROFIT HANGER ALLOWABLE LOADS[4]

STOCK NO.	DIMENSIONS[5]		FASTENER SCHEDULE[3]						ALLOWABLE LOADS (lbf)[1,2]			
	H	Max C_1	Header		Joist Sides[6]		Joist Bucket		Download			Uplift
	(in)	(in)	Qty	Type	Qty	Type	Qty	Type	C_D = 1.0	C_D = 1.15	C_D = 1.25	C_D = 1.60
LSRR26	5	$1^3/_4$	4	10d Common	4	10d Common	2	10d x $1^1/_2$	870	1000	1080	1020
LSRR28	$7^1/_{16}$	3	6	10d Common	4	10d Common	2	10d x $1^1/_2$	1110	1270	1360	1190
LSRR210	$8^5/_{16}$	$3^1/_4$	6	10d Common	6	10d Common	2	10d x $1^1/_2$	1310	1495	1620	1560
LSRR212	$10^5/_{16}$	$4^1/_2$	6	10d Common	6	10d Common	2	10d x $1^1/_2$	1310	1495	1555	1630

For **SI**: 1 inch = 25.4 mm, 1 lbf = 4.45 N.
[1]Allowable loads have been adjusted for load duration factors C_D, as shown, in accordance with the NDS. The allowable loads do not apply to loads of other durations and are not permitted to be adjusted for other load durations. See Sections 4.1 and 4.2 for additional design and installation requirements.
[2]Allowable loads shown are for installations in wood members complying with Section 3.10.2.
[3]See Section 3.10.3 for required fastener dimensions and mechanical properties.
[4]Hangers may be field adjusted to a maximum of 45 degrees up or down from horizontal.
[5]C_1 is the maximum vertical distance the hanger's perforated bend line can extend below the bottom of the header.
[6]Joist nails must be driven horizontally into the joist at an angle of 30- to 45-degrees from normal, such that they penetrate through the joist and into the header.

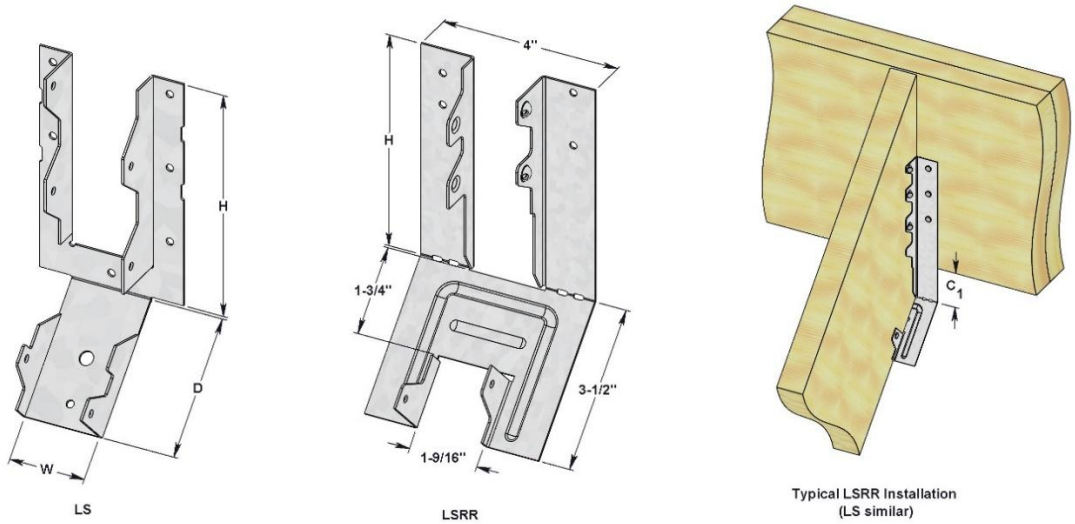

FIGURE 1—LS LIGHT SLOPE HANGER AND LSRR LIGHT SLOPE RAFTER AND RETROFIT HANGER

TABLE 3—LSSH LIGHT SLOPEABLE/SKEWABLE HANGER ALLOWABLE LOADS[1,2,3]

STOCK NO.	STEEL GAGE	DIMENSIONS (in.)					FASTENER SCHEDULE				ALLOWABLE LOADS (lbf)			
		Joist (W)	W1	W2	H	D	Header		Joist		$F_{c\text{-}perp}$ = 625 (psi)			Uplift
							Qty	Type	Qty	Type	C_D=1.0	C_D=1.15	C_D=1.25	C_D=1.6
Sloped only Hangers														
LSSH15-TZ	18	1 1/2	1 9/16	1 3/4	5 1/16	3	6	10d Com.	7	10d x 1 1/2	720	820	885	565
LSSH210	18	1 1/2	1 9/16	1 3/4	8 13/16	3	10	10d Com.	7	10d x 1 1/2	1,200	1,370	1,395	410
LSSH179	18	1 3/4	1 13/16	1 5/8	8 13/16	3	10	10d Com.	7	10d x 1 1/2	1,200	1,370	1,395	880
LSSH20	18	2 1/8	2 1/8	2 1/2	8 13/16	3	10	10d Com.	7	10d x 1 1/2	1,200	1,370	1,395	795
LSSH23	18	2 1/4-2 5/16	2 5/16	2 3/8	8 13/16	3	10	10d Com.	7	10d x 1 1/2	1,200	1,370	1,395	945
LSSH25	16	2 1/2	2 9/16	2 3/4	8 13/16	3	18	16d Com.	12	10d x 1 1/2	2,095	2,095	2,095	945
LSSH26	16	2 5/8	2 11/16	2 5/8	8 13/16	3	18	16d Com.	12	10d x 1 1/2	2,095	2,095	2,095	945
LSSH31	16	3	3 1/8	3 3/4	8 13/16	3	18	16d Com.	12	10d x 1 1/2	2,645	3,000	3,115	1,310
LSSH35	16	3 1/2	3 9/16	3 1/2	8 13/16	3	18	16d Com.	12	10d x 1 1/2	2,645	3,000	3,115	1,310
Skewed Hangers or Sloped and Skewed Hangers														
LSSH15-TZ	18	1 1/2	1 9/16	1 3/4	5 1/16	3	6	10d Com.	7	10d x 1 1/2	620	620	620	510
LSSH210	18	1 1/2	1 9/16	1 3/4	8 13/16	3	10	10d Com.	7	10d x 1 1/2	1,200	1,370	1,395	880
LSSH179	18	1 3/4	1 13/16	1 5/8	8 13/16	3	10	10d Com.	7	10d x 1 1/2	1,200	1,370	1,395	880
LSSH20	18	2 1/8	2 1/8	2 1/2	8 13/16	3	10	10d Com.	7	10d x 1 1/2	1,200	1,230	1,230	795
LSSH23	18	2 1/4-2 5/16	2 5/16	2 3/8	8 13/16	3	10	10d Com.	7	10d x 1 1/2	1,200	1,230	1,230	795
LSSH25	16	2 1/2	2 9/16	2 3/4	8 13/16	3	14	16d Com.	12	10d x 1 1/2	1,610	1,610	1,610	945
LSSH26	16	2 5/8	2 11/16	2 5/8	8 13/16	3	14	16d Com.	12	10d x 1 1/2	1,610	1,610	1,610	945
LSSH31	16	3	3 1/8	3 3/4	8 13/16	3	14	16d Com.	12	10d x 1 1/2	1,610	1,610	1,610	1,310
LSSH35	16	3 1/2	3 9/16	3 1/2	8 13/16	3	14	16d Com.	12	10d x 1 1/2	1,610	1,610	1,610	1,310

For **SI:** 1 inch = 25.4 mm, 1 lbf = 4.45 N, 1 psi = 6,895 Pa.

[1]Allowable loads have been adjusted for load duration factor, C_D, as shown, in accordance with NDS. The allowable loads do not apply to loads of other load durations, and are not permitted to be adjusted for other load durations. See Section 4.1 and 4.2 for additional design and installation requirements.
[2]Allowable loads shown are for installation in wood members complying with Section 3.10.2. Wood members must also have a minimum reference compression perpendicular to grain design values, $F_{c\text{-}perp}$, as specified in the table.
[3]See Section 3.10.3 for required fastener dimensions and mechanical properties.

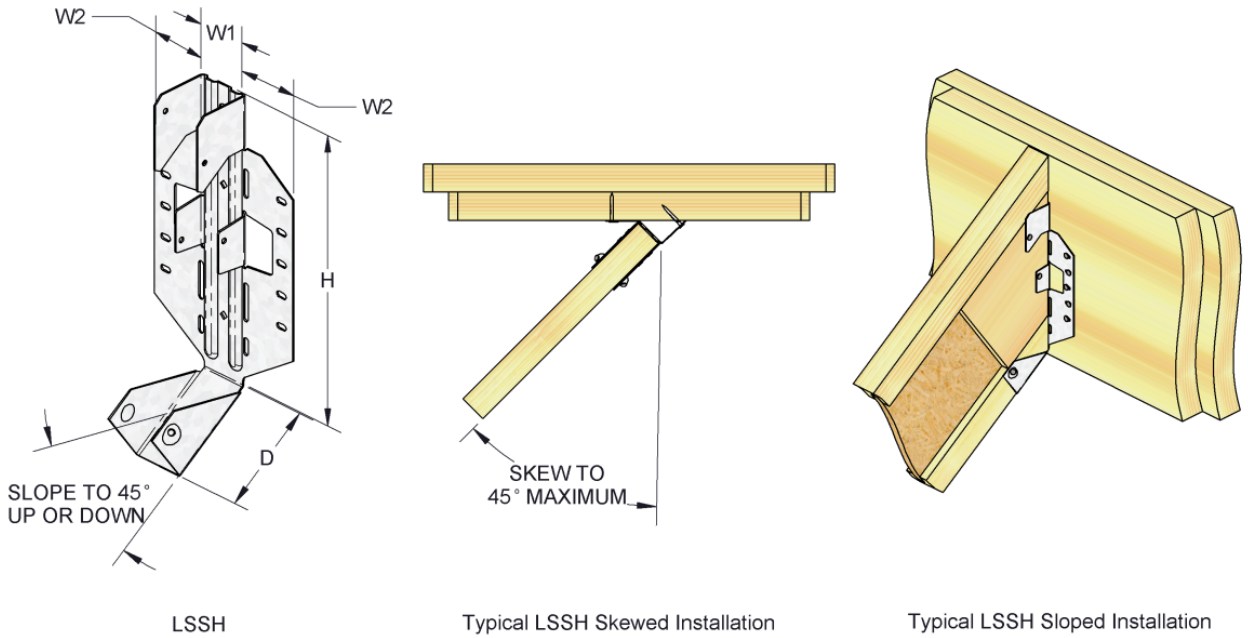

FIGURE 2—LSSH LIGHT SLOPEABLE/SKEWABLE HANGER

TABLE 4—LSS LIGHT SLOPEABLE/SKEWABLE HANGER ALLOWABLE LOADS

STOCK NO.	DIMENSIONS (in.)		FASTENER SCHEDULE[3]				ALLOWABLE LOADS (lbf)[1,2,5]			
			Header		Joist		Download			Uplift
	W	H	Qty	Type	Qty	Type[4]	C_D = 1.0	C_D = 1.15	C_D = 1.25	C_D = 1.6
LSS26L-TZ LSS26R-TZ	$1^1/_4$	$5^3/_8$	4	10d x $1^1/_2$	6	10d x $1^1/_2$	480	520	520	520
			4	10d Common	6	10d Common	870	1000	1110	1110
LSS28L-TZ LSS28R-TZ	$1^1/_4$	$7^1/_8$	5	10d x $1^1/_2$	7	10d x $1^1/_2$	600	685	740	740
			5	10d Common	7	10d Common	1090	1250	1385	1385
LSS210L-TZ LSS210R-TZ	$1^1/_4$	$9^1/_8$	6	10d x $1^1/_2$	8	10d x $1^1/_2$	720	820	885	885
			6	10d Common	8	10d Common	1310	1495	1600	1600

For **SI:** 1 inch = 25.4 mm, 1 lbf = 4.45 N, 1 psi = 6,895 Pa.

[1]Allowable loads have been adjusted for load duration factors, CD, as shown, in accordance with the NDS. The allowable loads do not apply to loads of other durations, and are not permitted to be adjusted for other load durations. See Sections 4.1 and 4.2 for additional design and installation requirements.
[2]Allowable loads shown are for installations in wood members complying with Section 3.10.2.
[3]See Section 3.10.3 for required fastener dimensions and mechanical properties.
[4]10d x $1^1/_2$ nails may be substituted for 10d common nails in the two lowermost joist bucket nail holes for all installations with no reduction in allowable loads.
[5]Allowable loads apply to hangers skewed 0°-45° from perpendicular with the hanger bucket sloped 0°-45° up or down from horizontal.

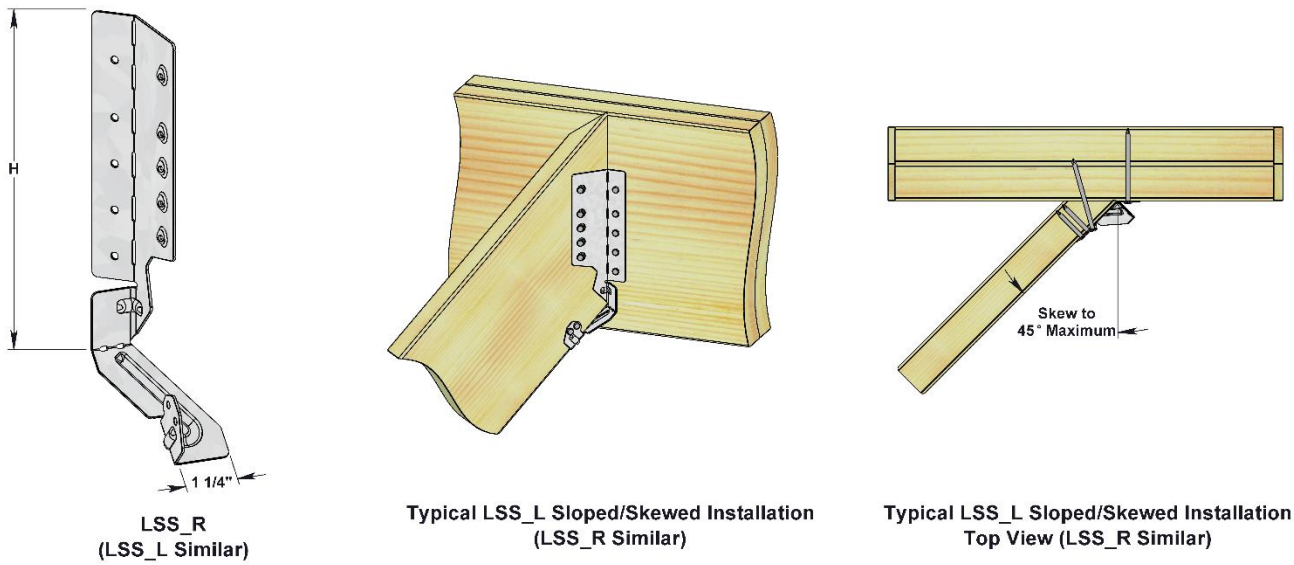

FIGURE 3—LSS LIGHT SLOPEABLE/SKEWABLE HANGER

TABLE 5—MSH L/R STRAP HANGER ALLOWABLE LOADS[1,2,3]

STOCK NO.	STEEL GAGE	DIMENSION (in.)				MOUNTING[4] CONDITION	FASTENERS					ALLOWABLE LOAD (lbf)			
							Header			Joist		Download			Uplift
		W	D	H	B		Top Qty.	Face Qty.	Type	Qty	Type	C_D = 1.0	C_D = 1.15	C_D = 1.25	C_D = 1.6
MSH213 L/R	18	$1^5/_8$	$2^1/_4$	$13^1/_4$	5	Face-Max	-	22	10d Common	6	10d x $1^1/_2$	1,770	1,770	1,770	670
						Top-Max	4	6	10d Common	6	10d x $1^1/_2$	1,810	1,810	1,810	670
						Top-Min	4	2	10d Common	6	10d x $1^1/_2$	1,325	1,325	1,325	-
MSH422 L/R	16	$3^9/_{16}$	2	22	$5^1/_8$	Face-Max	-	14	10d Common	6	10d Common	1,750	1,755	1,755	560
						Top-Max	4	6	10d Common	6	10d Common	1,820	1,820	1,820	560
						Top-Min	4	2	10d Common	6	10d Common	1,385	1,385	1,385	-

For **SI:** 1 inch = 25.4 mm, 1 lbf = 4.45 N, 1 psi = 6,895 Pa.

[1]Allowable loads have been adjusted for load duration factors, C_D, as shown, in accordance with the NDS. The allowable loads do not apply to loads of other durations, and are not permitted to be adjusted for other load durations. See Sections 4.1 and 4.2 for additional design and installation requirements.
[2]Allowable loads shown are for installations in wood members complying with Section 3.10.2. Wood members must also have a minimum reference compression perpendicular to grain design value, $F_{c\text{-}perp}$, of 460 psi (3.17 MPa).
[3]See Section 3.10.3 for required fastener dimensions and mechanical properties.
[4]See Figure 3 for installation details. Mounting conditions are as follows:
Face-Max – The specified number of header nails must be driven into the wide face of the header.
Top-Max – The hanger is installed in a top mount condition with at least six nail holes filled on the face of the header, and four nail holes filled on the top of the header. The straps must wrap over the top of the header at least 2.5 inches (63.5 mm).
Top-Min – The hanger is installed in a top mount condition with at least the top two nail holes filled on the face of the header, and four nail holes filled on the top of the header. The straps must wrap over the top of the supporting member at least 2.5 inches (63.5 mm).

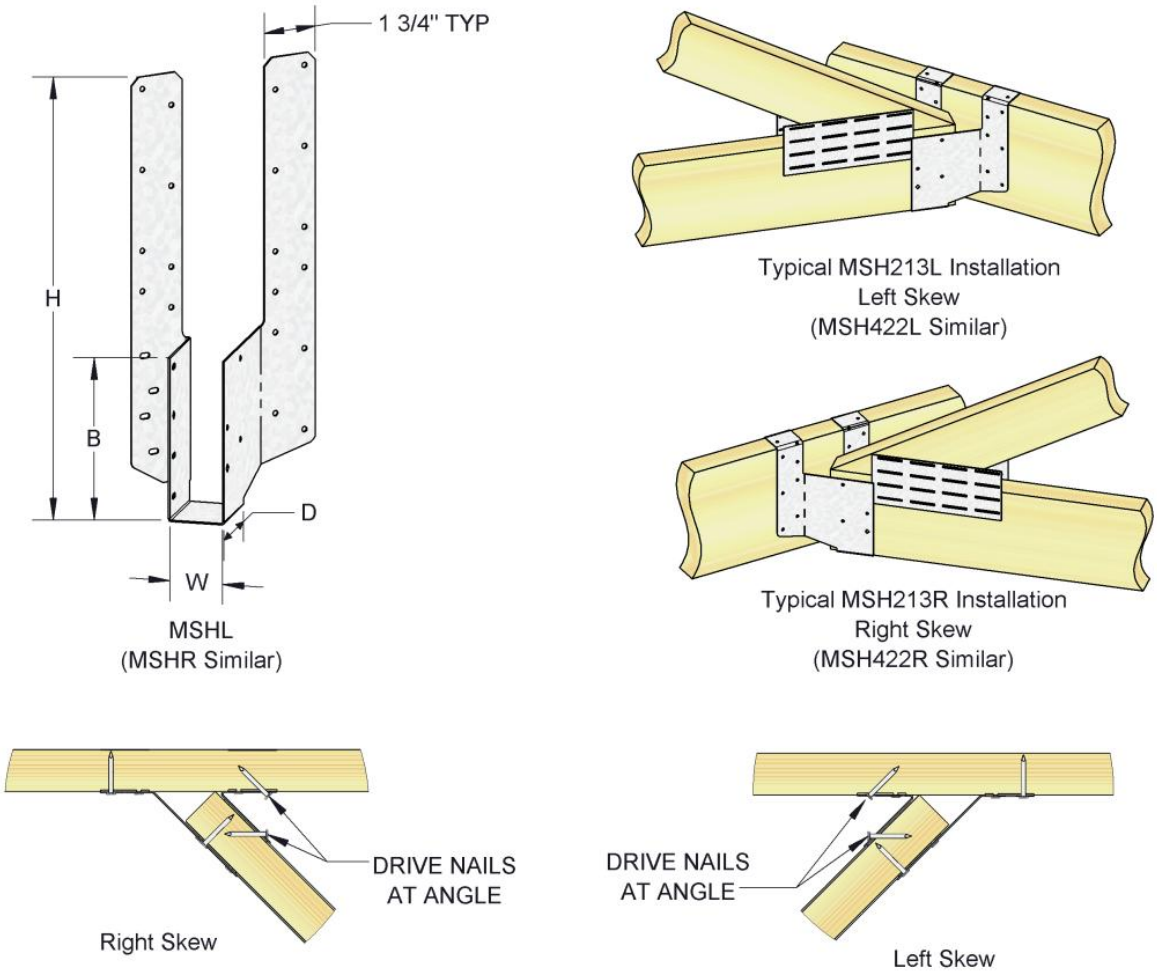

FIGURE 4—MSH L/R STRAP HANGER

TABLE 6—SKH SKEWED 45° HANGER ALLOWABLE LOADS[1,2,3]

STOCK NO.	STEEL GAGE	DIMENSIONS (in.)			FASTENER SCHEDULE				ALLOWABLE LOADS (lbf)						
					Header		Joist		$F_{C\text{-}perp}$ = 460 psi			$F_{C\text{-}perp}$ = 625 psi			Uplift
		W	H	D	Face	Type	Qty	Type	C_D = 1.0	C_D = 1.15	C_D = 1.25	C_D = 1.0	C_D = 1.15	C_D = 1.25	C_D = 1.6
SKH24L/R	16	1 9/16	3 1/4	1 7/8	4	16d Common	4	10dx1 1/2	510	510	510	510	510	510	545
SKH26L/R	16	1 9/16	5 1/4	1 7/8	6	16d Common	6	10dx1 1/2	840	890	890	840	890	890	1,135
SKH28L/R	16	1 9/16	7 1/4	1 7/8	10	16d Common	8	10dx1 1/2	1,400	1,465	1,465	1,400	1465	1,465	1,350
SKH210L/R	16	1 9/16	9 1/4	1 7/8	14	16d Common	10	10dx1 1/2	1,790	1,790	1,790	1,790	1790	1,790	1,530
SKH1720L/R	16	1 13/16	9 1/8	1 7/8	14	10d Common	10	10dx1 1/2	1,650	1,760	1,760	1,650	1760	1,760	1,530
SKH1724L/R	16	1 13/16	11 1/8	1 7/8	16	10d Common	10	10dx1 1/2	1,890	2,170	2,360	1,890	2170	2,360	1,530
SKH2020L/R	16	2 1/8	9	1 7/8	14	10d Common	10	10dx1 1/2	1,650	1,760	1,760	1,650	1760	1,760	1,530
SKH2024L/R	16	2 1/8	11	1 7/8	16	10d Common	10	10dx1 1/2	1,890	2,170	2,360	1,890	2170	2,360	1,530
SKH2320L/R	16	2 3/8	8 7/8	1 7/8	14	10d Common	10	10dx1 1/2	1,650	1,760	1,760	1,650	1760	1,760	1,530
SKH2324L/R	16	2 3/8	10 7/8	1 7/8	16	10d Common	10	10dx1 1/2	1,890	2,170	2,360	1,890	2170	2,360	1,530
SKH36L/R	16	2 9/16	4 3/4	1 3/8	6	16d Common	6	10dx1 1/2	840	965	1,050	840	965	1,050	1,135
SKH38L/R	16	2 9/16	6 3/4	1 3/8	10	16d Common	8	10dx1 1/2	1,400	1,550	1,550	1,400	1550	1,550	1,510
SKH310L/R	16	2 9/16	8 3/4	1 3/8	14	16d Common	10	10dx1 1/2	2,060	2,365	2,465	2,060	2365	2,465	1,530
SKH312L/R	16	2 9/16	10 3/4	1 3/8	16	16d Common	10	10dx1 1/2	2,350	2,705	2,750	2,350	2705	2,750	1,530
SKH2520L/R	16	2 9/16	8 5/8	1 7/8	14	10d Common	10	10dx1 1/2	1,650	1,760	1,760	1,650	1760	1,760	1,530
SKH2524L/R	16	2 9/16	10 3/4	1 7/8	16	10d Common	10	10dx1 1/2	1,890	2,170	2,360	1,890	2170	2,360	1,530
SKH2620L/R	16	2 11/16	8 11/16	1 7/8	14	10d Common	10	10dx1 1/2	1,650	1,760	1,760	1,650	1760	1,760	1,530
SKH2624L/R	16	2 11/16	10 11/16	1 7/8	16	10d Common	10	10dx1 1/2	1,890	2,170	2,360	1,890	2170	2,360	1,530
* SKH26L/R-2	16	3 1/16	4 1/2	1 3/8	6	16d Common	6	10d Common	840	965	1,050	840	965	1,050	1,135
* SKH28L/R-2	16	3 1/16	6 1/2	1 3/8	10	16d Common	8	10d Common	1,400	1,610	1,750	1,400	1610	1,750	1,350
* SKH210L/R-2	16	3 1/16	8 1/2	1 3/8	14	16d Common	10	10d Common	1,960	2,255	2,450	1,960	2255	2,450	1,530
* SKH212-2L/R	16	3 1/16	10 1/2	1 3/8	16	16d Common	10	10d Common	2,240	2,575	2,800	2,240	2575	2,800	1,530
* SKH46L/R	14	3 9/16	4 3/4	2 1/2	10	16d Common	6	16d Common	1,440	1,590	1,590	1,440	1590	1,590	1,350
* SKH410L/R	14	3 9/16	8 1/2	2 1/2	16	16d Common	10	16d Common	2,305	2,650	2,865	2,305	2650	2,865	1,530
* SKH414L/R	14	3 9/16	12 1/2	2 1/2	22	16d Common	10	16d Common	3,170	3,645	3,960	3,170	3645	3,960	1,530
* SKH2020L/R-2	14	4 3/16	9 1/4	3 1/2	14	10d Common	10	10d Common	1,710	1,965	2,135	1,710	1965	2,135	1,645
* SKH2024L/R-2	14	4 3/16	11 1/4	3 1/2	16	10d Common	10	10d Common	1,950	2,245	2,440	1,950	2245	2,440	1,680
* SKH2320L/R-2	14	4 7/8	9 1/4	3 1/2	14	10d Common	10	10d Common	1,710	1,965	2,135	1,710	1965	2,135	1,645
* SKH2324L/R-2	14	4 7/8	11 1/4	3 1/2	16	10d Common	10	10d Common	1,950	2,245	2,440	1,950	2245	2,440	1,680
* SKH2520L/R-2	14	5 1/8	9 1/4	3 1/2	14	10d Common	10	10d Common	1,710	1,965	2,135	1,710	1965	2,135	1,645
* SKH2524L/R-2	14	5 1/8	11 1/4	3 1/2	16	10d Common	10	10d Common	1,950	2,245	2,440	1,950	2245	2,440	1,680

For **SI:** 1 inch = 25.4 mm, 1 lbf = 4.45 N, 1 psi = 6,895 Pa.

[1]Allowable loads have been adjusted for load duration factors, C_D, as shown, in accordance with the NDS. The allowable loads do not apply to loads of other durations, and are not permitted to be adjusted for other load durations. See Section 4.1 and 4.2 for additional design and installation requirements.
[2]See Section 3.10.3 for required fastener dimensions and mechanical properties.
[3]Allowable loads shown are for installations in wood members complying with Section 3.10.2. Wood members must also have a minimum reference compression perpendicular to grain design value, $F_{c\text{-}perp}$, of either 460 psi (3.17 MPa), or 625 psi (4.31 MPa), as specified in the table above.
* Denotes models for which joist ends must either be miter-cut at a 45-degree angle to provide maximum bearing area in the hanger seat. In multi-ply I-joist applications, miter cuts are not required, provided the I-joists are staggered in the hanger such that the nearest corner of each I-joist is within 1/8-inch (3.18 mm) of the face of the supporting member.

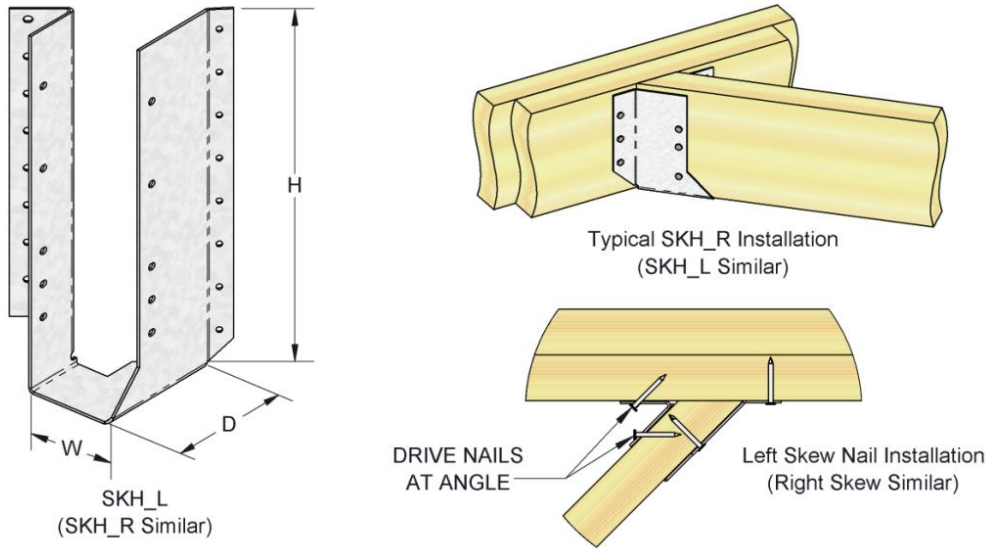

FIGURE 5—SKH SKEWED 45° HANGER

TABLE 7—NAILING SCHEDULES, DIMENSIONS AND ALLOWABLE LOADS FOR SNP SKEWED NAIL PLATES

STOCK NUMBER	STEEL GAGE	HANGER DIMENSIONS (inches)			FASTENER SCHEDULE[3]				ALLOWABLE LOADS (lbf)[1,2,5]				
					Supporting Member		Supported Member		Skew	Download			Uplift
		W1	W2	H	Qty[4]	Type[3]	Qty[4]	Type[3]		C_D = 1.00	C_D = 1.15	C_D = 1.25	C_D = 1.60
SNP3	16	$3^1/_2$	$3^1/_2$	$3^3/_8$	6	8d x $1^1/_2$	6	8d x $1^1/_2$	0 to 85°	470			
SNP5	16	$3^1/_2$	$3^1/_2$	$5^5/_{16}$	9	8d x $1^1/_2$	12	8d x $1^1/_2$	0° to 29°	830			
									30°	900			
					12	8d x $1^1/_2$	12	8d x $1^1/_2$	31 to 84°	805			
									85°	835			

For **S1:** 1 inch = 25.4 mm, 1 lbf = 4.45 N.

[1]Allowable loads have been adjusted for load duration factors, C_D, as shown, in accordance with the NDS, and are not permitted to be adjusted for other load durations. See Section 4.1 for additional design requirements.
[2]Allowable loads shown are for installations in sawn lumber or structural composite lumber complying with Section 3.10.2.
[3]See Section 3.10.3 for required nail dimensions and mechanical properties.
[4]Install specified fasteners into the wide faces of the members, from the bend line out on each flange of SNP nail plate. Not all nail holes will be filled.
[5]The SNP was tested for use with a bend angle of 5 to 90 between SNP flanges, corresponding to a joist skew from 0 to 85 degrees from perpendicular to the supporting truss member. Refer to Figure 6 Top View for details.

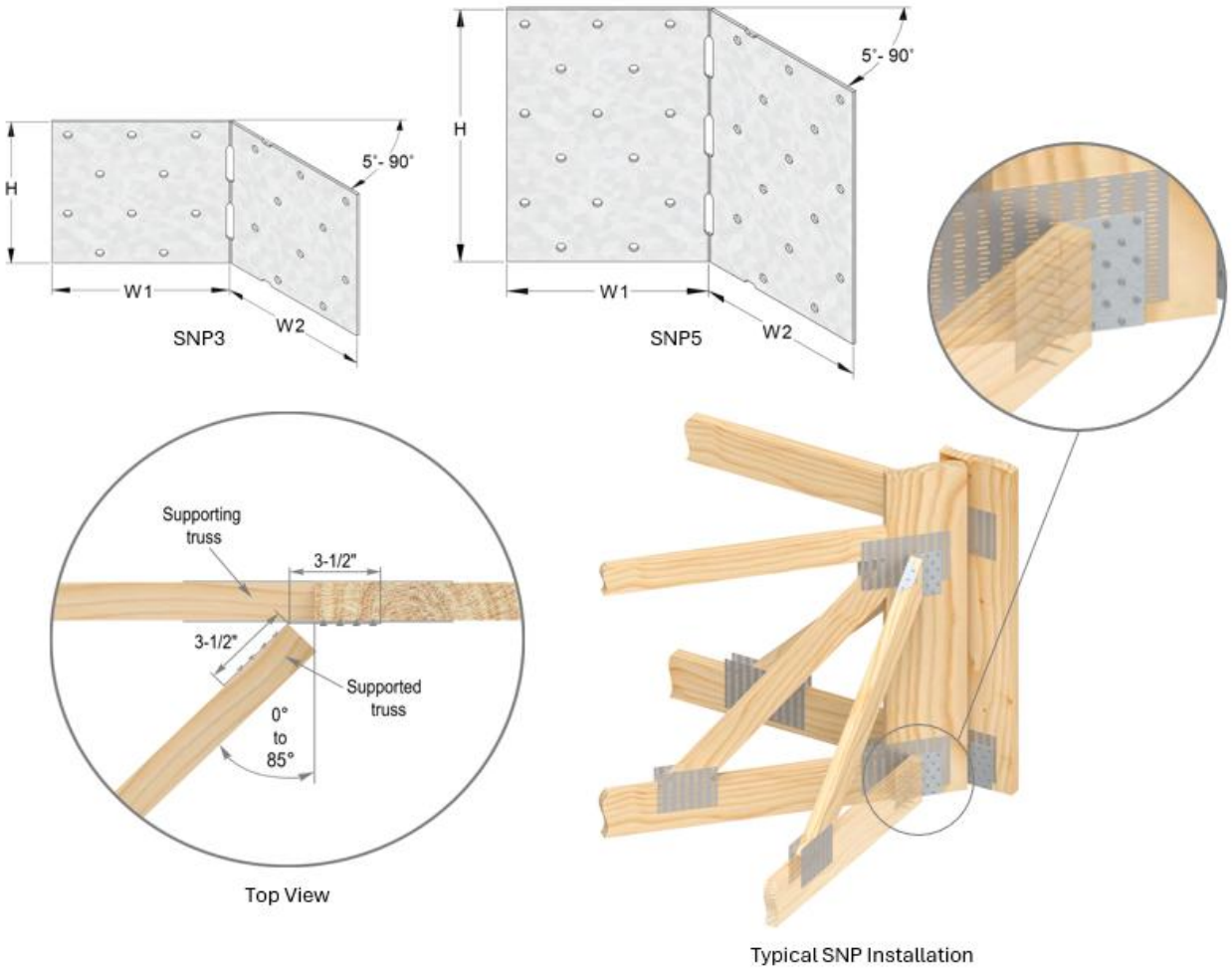

FIGURE 6—SNP SKEWED NAIL PLATE

TABLE 8—TMP ADJUSTABLE RAFTER-TO-PLATE CONNECTOR ALLOWABLE LOADS [1, 2, 3]

STOCK NO.	STEEL GAGE	DIMENSIONS (in.)				FASTENER SCHEDULE				ALLOWABLE LOADS (lbf)						
		Joist (W)	W	L	D	Plate		Rafter		$F_{C\text{-}perp}$ = 460 psi			$F_{C\text{-}perp}$ = 625 psi			Uplift [3]
						Qty	Type	Qty	Type	C_D = 1.0	C_D = 1.15	C_D = 1.25	C_D = 1.0	C_D = 1.15	C_D = 1.25	C_D = 1.6
TMP2	18	$1^1/_2$	$1^9/_{16}$	$5^9/_{16}$	$3^1/_2$	6	10d Common	4	10dx$1^1/_2$	1,705	1,705	1,705	1,705	1,705	1,705	245
TMP175	18	$1^3/_4$	$1^{13}/_{16}$	$5^9/_{16}$	$3^1/_2$	6	10d Common	4	10dx$1^1/_2$	1,705	1,705	1,705	1,705	1,705	1,705	245
TMP21	18	2 - $2^1/_8$	$2^1/_8$	$6^3/_8$	$3^1/_2$	6	10d Common	4	10dx$1^1/_2$	1,705	1,705	1,705	1,705	1,705	1,705	245
TMP23	18	$2^5/_{16}$	$2^3/_8$	$6^3/_8$	$3^1/_2$	6	10d Common	4	10dx$1^1/_2$	1,705	1,705	1,705	1,705	1,705	1,705	245
TMP25	18	$2^1/_2$ - $2^5/_8$	$2^{11}/_{16}$	$6^3/_8$	$3^1/_2$	6	10d Common	4	10dx$1^1/_2$	1,705	1,705	1,705	1,705	1,705	1,705	245
TMP31	18	3	$3^1/_8$	$7^5/_{16}$	$3^1/_2$	6	10d Common	4	10dx$1^1/_2$	1,705	1,705	1,705	1,705	1,705	1,705	245
TMP4	18	$3^1/_2$	$3^9/_{16}$	$7^5/_{16}$	$3^1/_2$	6	10d Common	4	10dx$1^1/_2$	1,705	1,705	1,705	1,705	1,705	1,705	245

For **SI:** 1 inch = 25.4 mm, 1 lbf = 4.45 N, 1 psi = 6,895 Pa.

[1]Allowable loads have been adjusted for load duration factors, C_D, as shown, in accordance with the NDS. The allowable loads do not apply to loads of other durations, and are not permitted to be adjusted for other load durations. See Sections 4.1 and 4.2 for additional design and installations requirements.
[2]See Section 3.10.3 for required fastener dimensions and mechanical properties.
[3]Allowable loads shown are for installations in wood members complying with Section 3.10.2. Wood members must also have a minimum reference compression perpendicular to grain design value, $F_{c\text{-}perp}$, of either 460 psi (3.17 MPa), or 625 psi (4.31 MPa), as specified in the table above.

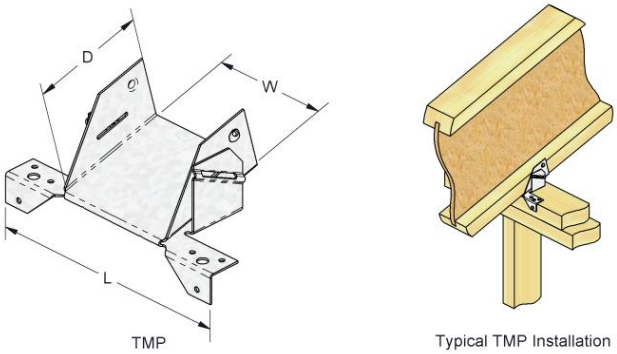

FIGURE 7—TMP RAFTER-TO-PLATE CONNECTOR

TABLE 9—TMPH RAFTER-TO-PLATE CONNECTOR ALLOWABLE LOADS[1,2,3,4]

STOCK NO.	STEEL GAGE	DIMENSIONS (in.)				FASTENER SCHEDULE					
		W	L	D	H	Plate				Rafter	
						Top		Side			
						Qty	Type	Qty	Type	Qty	Type
TMPH2	16	$1^9/_{16}$	$6^9/_{16}$	4	$2^1/_2$	8	10d Common	2	10d Common	8	10d x $1^1/_2$
TMPH175	16	$1^{13}/_{16}$	$6^9/_{16}$	4	$2^3/_8$	8	10d Common	2	10d Common	8	10d x $1^1/_2$
TMPH21	16	$2^1/_8$	$7^3/_8$	4	$2^5/_8$	8	10d Common	2	10d Common	8	10d x $1^1/_2$
TMPH23	16	$2^3/_8$	$7^3/_8$	4	$2^1/_2$	8	10d Common	2	10d Common	8	10d x $1^1/_2$
TMPH25	16	$2^{11}/_{16}$	$7^3/_8$	4	$2^5/_{16}$	8	10d Common	2	10d Common	8	10d x $1^1/_2$
TMPH 31	16	$3^1/_8$	$8^9/_{16}$	4	$2^{11}/_{16}$	8	10d Common	2	10d Common	8	10d x $1^1/_2$
TMPH4	16	$3^9/_{16}$	$8^9/_{16}$	4	$2^1/_2$	8	10d Common	2	10d Common	8	10d x $1^1/_2$

STOCK NO.	ALLOWABLE LOADS (lbf)									
	Downward Load (C_D = 1.15)									Uplift (C_D =1.6)
	Rafter Pitch									
	6/12	7/12	8/12	9/12	10/12	11/12	12/12	13/12	14/12	6/12 – 14/12
TMPH2	3,190	3,290	3,390	3,140	2,900	2,710	2,520	2,230	1,950	330
TMPH175	3,190	3,290	3,390	3,140	2,900	2,710	2,520	2,230	1,950	330
TMPH21	3,190	3,290	3,390	3,140	2,900	2,710	2,520	2,230	1,950	330
TMPH23	3,190	3,290	3,390	3,140	2,900	2,710	2,520	2,230	1,950	330
TMPH25	3,190	3,290	3,390	3,140	2,900	2,710	2,520	2,230	1,950	330
TMPH 31	3,190	3,290	3,390	3,140	2,900	2,710	2,520	2,230	1,950	330
TMPH4	3,190	3,290	3,390	3,140	2,900	2,710	2,520	2,230	1,950	330

For **SI:** 1 inch = 25.4 mm, 1 lbf = 4.45 N, 1 psi = 6,895 Pa.
[1]Allowable loads have been adjusted for load duration factors, C_D, as shown, in accordance with the NDS. The allowable loads do not apply to loads of other durations, and are not permitted to be adjusted for other load durations. See Sections 4.1 and 4.2 for additional design and installation requirements.
[2]Allowable loads shown are for installations in wood members complying with Section 3.10.2. Wood members must also have a minimum reference compression perpendicular to grain design value, $F_{c\text{-}perp}$, of 460 psi (3.17 MPa).
[3]See Section 3.10.3 for required fastener dimensions and mechanical properties.
[4]The TMPH rafter-to-plate connector may not be used to resist lateral loads parallel or perpendicular to the top plate.
[5]The fulcrum component is cold-formed from No. 12 gage steel.

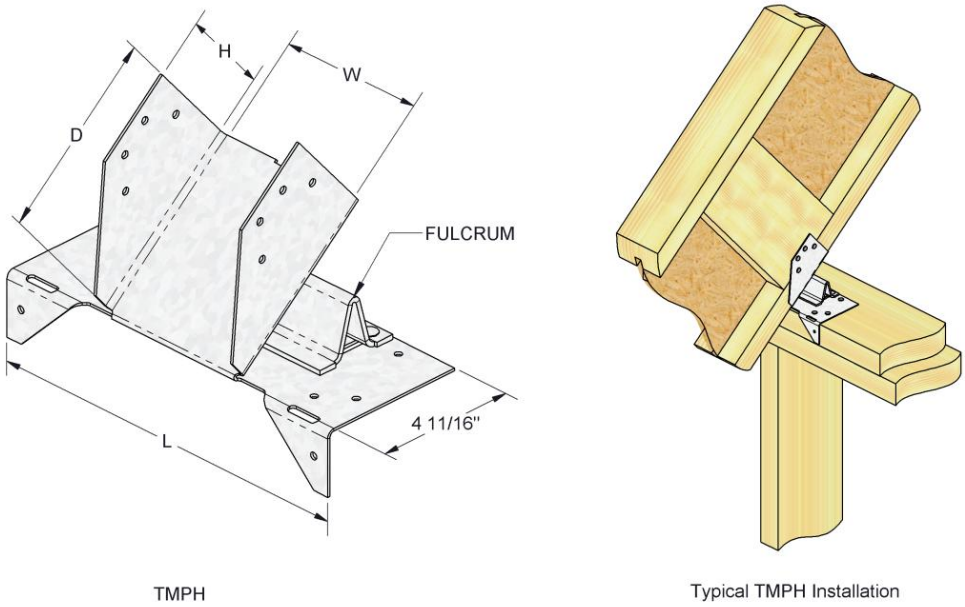

FIGURE 8—TMPH RAFTER-TO-PLATE CONNECTOR

TABLE 10—STEEL TYPE, STRENGTH AND CORROSION RESISTANCE

PRODUCT	STEEL	COATING[1]
LS Light Slope Hanger	ASTM A653, SS designation, Grade 40	G90
LSRR Light Slope Rafter and Retrofit Hanger	ASTM A653, SS designation, Grade 40	G185
LSSH Light Slopeable/Skewable Hanger	ASTM A653, SS designation, Grade 40	G90, G185
LSS Light Slopeable/Skewable Hanger	ASTM A653, SS designation, Grade 40	G185
MSH213L/R Strap Hanger	ASTM A653, SS designation, Grade 40	G90, G185
SKH Skewed 45° Hanger	ASTM A653, SS designation, Grade 40	G90, G185
SNP Skewed Nail Plate	ASTM A653, SS designation, Grade 40	G90
TMP Rafter-to-Plate Connector	ASTM A653, SS designation, Grade 40	G90
TMPH Rafter-to-Plate Connector	ASTM A653, SS designation, Grade 40	G90

[1]Corrosion protection is a zinc coating of sheet steel in accordance with ASTM A653.

DIVISION: 06 00 00—WOOD, PLASTICS AND COMPOSITES
Section: 06 05 23—Wood, Plastics, and Composite Fastenings

REPORT HOLDER:

MITEK® INC.

EVALUATION SUBJECT:

MITEK SLOPEABLE/SKEWABLE HANGERS FOR WOOD-FRAMED CONSTRUCTION

1.0 REPORT PURPOSE AND SCOPE

Purpose:

The purpose of this evaluation report supplement is to indicate that MiTek slopeable/skewable hangers for wood-framed construction, described in ICC-ES evaluation report ESR-3446, have also been evaluated for compliance with the codes noted below as adopted by the Los Angeles Department of Building and Safety (LADBS).

Applicable code editions:

- 2023 *City of Los Angeles Building Code* (LABC)
- 2023 *City of Los Angeles Residential Code* (LARC)

2.0 CONCLUSIONS

The MiTek slopeable/skewable hangers for wood-framed construction, described in Sections 2.0 through 7.0 of the evaluation report ESR-3446, comply with the LABC Chapter 23, and the LARC, and are subjected to the conditions of use described in this supplement.

3.0 CONDITIONS OF USE

The MiTek slopeable/skewable hangers for wood-framed construction, described in this evaluation report must comply with all of the following conditions:

- All applicable sections in the evaluation report ESR-3446.
- The design, installation, conditions of use and labeling are in accordance with the 2021 *International Building Code®* (IBC) provisions noted in the evaluation report ESR-3446.
- The design, installation and inspection are in accordance with additional requirements of LABC Chapters 16 and 17, as applicable.
- Under the LARC, an engineered design in accordance with LARC Section R301.1.3 must be submitted.

This supplement expires concurrently with the evaluation report ESR-3446, reissued October 2025 and revised December 2025.

ICC-ES Evaluation Reports are not to be construed as representing aesthetics or any other attributes not specifically addressed, nor are they to be construed as an endorsement of the subject of the report or a recommendation for its use. There is no warranty by ICC Evaluation Service, LLC, express or implied, as to any finding or other matter in this report, or as to any product covered by the report.

Copyright © 2025 ICC Evaluation Service, LLC. All rights reserved.

DIVISION: 06 00 00—WOOD, PLASTICS AND COMPOSITES
Section: 06 05 23—Wood, Plastics, and Composite Fastenings

REPORT HOLDER:

MITEK® INC.

EVALUATION SUBJECT:

MITEK® SLOPEABLE/SKEWABLE HANGERS FOR WOOD-FRAMED CONSTRUCTION

1.0 REPORT PURPOSE AND SCOPE

Purpose:

The purpose of this evaluation report supplement is to indicate that MiTek slopeable/skewable hangers for wood-framed construction, described in ICC-ES evaluation report ESR-3446, have also been evaluated for compliance with the code*(s)* noted below.

Applicable code edition(s):

- 2025 and 2022 *California Building Code* (CBC)

For evaluation of applicable Chapters adopted by the California Office of Statewide Health Planning and Development (OSHPD) AKA: California Department of Health Care Access and Information (HCAI) and the Division of State Architect (DSA), see Sections 2.1.1 and 2.1.2 below.

- 2025 and 2022 *California Residential Code* (CRC)

2.0 CONCLUSIONS

2.1 CBC:

The MiTek slopeable/skewable hangers for wood-framed construction, described in Sections 2.0 through 7.0 of the evaluation report ESR-3446, comply with CBC Chapter 23, provided the design and installation are in accordance with the 2024 and 2021 *International Building Code®* (IBC) provisions, as applicable, noted in the evaluation report and the additional requirements of CBC Chapter 16, 17 and 23, as applicable.

2.1.1 OSHPD:

The applicable OSHPD Sections and Chapters of the CBC are beyond the scope of this supplement.

2.1.2 DSA:

The applicable DSA Sections and Chapters of the CBC are beyond the scope of this supplement.

2.2 CRC:

The MiTek slopeable/skewable hangers for wood-framed construction, described in Sections 2.0 through 7.0 of the evaluation report ESR-3446, comply with CRC Chapter 3, provided the design and installation are in accordance with the 2024 and 2021 *International Residential Code®* (IRC) provisions, as applicable, noted in the evaluation report and the additional requirements of CRC Chapter 3, as applicable.

This supplement expires concurrently with the evaluation report, reissued October 2025 and revised December 2025.

ICC-ES Evaluation Reports are not to be construed as representing aesthetics or any other attributes not specifically addressed, nor are they to be construed as an endorsement of the subject of the report or a recommendation for its use. There is no warranty by ICC Evaluation Service, LLC, express or implied, as to any finding or other matter in this report, or as to any product covered by the report.

Copyright © 2025 ICC Evaluation Service, LLC. All rights reserved.

DIVISION: 06 00 00—WOOD, PLASTICS AND COMPOSITES
Section: 06 05 23—Wood, Plastic, and Composite Fastenings

REPORT HOLDER:

MITEK® INC.

EVALUATION SUBJECT:

MITEK SLOPEABLE/SKEWABLE HANGERS FOR WOOD-FRAMED CONSTRUCTION

1.0 REPORT PURPOSE AND SCOPE

Purpose:

The purpose of this evaluation report supplement is to indicate that MiTek Slopeable and Skewable Hangers for wood-framed construction, described in ICC-ES evaluation report ESR-3446, have also been evaluated for compliance with the codes noted below.

Applicable code editions:

- 2023 and 2020 *Florida Building Code—Building*
- 2023 and 2020 *Florida Building Code—Residential*

2.0 CONCLUSIONS

The MiTek Slopeable and Skewable Hangers for wood-framed construction, described in Sections 2.0 through 7.0 of the evaluation report ESR-3446, comply with the *Florida Building Code—Building* and the *Florida Building Code—Residential,* provided the design requirements are determined in accordance with the *Florida Building Code—Building* or the *Florida Building Code—Residential*, as applicable. The installation requirements noted in ICC-ES evaluation report ESR-3446 for the 2021 and 2018 *International Building Code®* meet the requirements of the *Florida Building Code—Building* or the *Florida Building Code—Residential*, as applicable.

Use of the MiTek Slopeable and Skewable Hangers for wood-framed construction has also been found to be in compliance with the High-Velocity Hurricane Zone (HVHZ) provisions of the *Florida Building Code—Building*, and the *Florida Building Code—Residential* with following condition:

a) For connections subject to uplift, the connection must be designed for no less than 700 pounds (3114 N).

For products falling under Florida Rule 61G20-3, verification that the report holder's quality assurance program is audited by a quality assurance entity approved by the Florida Building Commission for the type of inspections being conducted is the responsibility of an approved validation entity (or the code official, when the report holder does not possess an approval by the Commission).

This supplement expires concurrently with the evaluation report ESR-3446, reissued October 2025 and revised December 2025.

ICC-ES Evaluation Reports are not to be construed as representing aesthetics or any other attributes not specifically addressed, nor are they to be construed as an endorsement of the subject of the report or a recommendation for its use. There is no warranty by ICC Evaluation Service, LLC, express or implied, as to any finding or other matter in this report, or as to any product covered by the report.

Copyright © 2025 ICC Evaluation Service, LLC. All rights reserved.